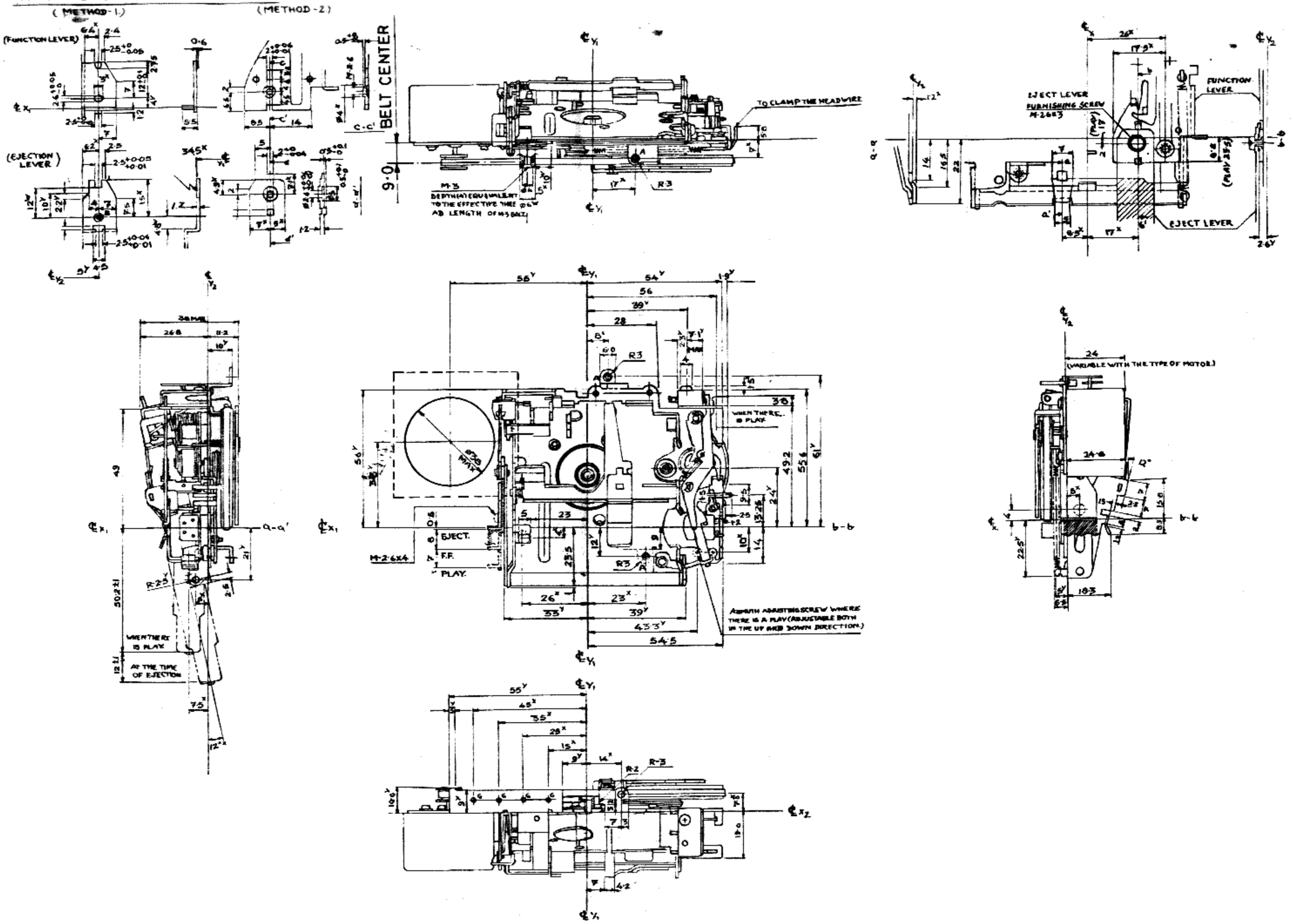DETAILS OF THE EJECTOR LEVER MOUNTING SECTION